1. ALL RESISTANCE VALUES ARE IN OHMS, 0.1 WATT +/- 5%.
2. ALL CAPACITANCE VALUES ARE IN MICROFARADS.
3. ALL CRYSTALS & OSCILLATOR VALUES ARE IN HERTZ.

| REV | ECN | DESCRIPTION OF REVISION | CK APPD / DATE |
|---|---|---|---|
| 1 | 0009780807 | ENGINEERING RELEASED | 2017-08-29 |

# SCORPIUS BOARD J317

| CKPLUS RULE EXCEPTIONS | REQUIRED |
|---|---|
| SCHEMATIC DEFINED CONSTRAINTS (YES/NO) | NO |

| PART# | QTY | DESCRIPTION | REFERENCE DESIGNATOR(S) | CRITICAL | BOM OPTION |
|---|---|---|---|---|---|
| 051-03166 | 1 | SCHEM,BOARD,SCORPIUS,J317 | SCH1 | CRITICAL | |
| 820-01199 | 1 | PCBF,BOARD,SCORPIUS,J317 | PCB1 | CRITICAL | |

LAST_MODIFICATION=Tue Aug 29 18:24:22 2017


| PAGE | CSA | CONTENTS | SYNC | DATE |
|---|---|---|---|---|
| 1 | 1 | TITLE | | |
| 2 | 2 | CONNECTOR | | |
| 3 | 3 | BUS SENSE | | 07/18/2017 |
| 4 | 4 | MCU | | 07/18/2017 |
| 5 | 5 | ASK DEMOD | | 07/18/2017 |
| 6 | 6 | CHARGE PUMP | SCORPIUS_DISCRETE | 07/18/2017 |
| 7 | 7 | INVERTER 0 | SCORPIUS_DISCRETE | 07/18/2017 |
| 8 | 8 | INVERTER 1 | SCORPIUS_DISCRETE | 07/18/2017 |
| 9 | 9 | COILS | SCORPIUS_DISCRETE | 07/18/2017 |
| 10 | 10 | Debug | | |


DRAWING TITLE:
SCHEM,BOARD,SCORPIUS_DISCRETE,J317

# CONNECTORS

## SCORPIUS HOTBAR

FLEX SIDE APN:998-11307
MLB SIDE APN:998-11306

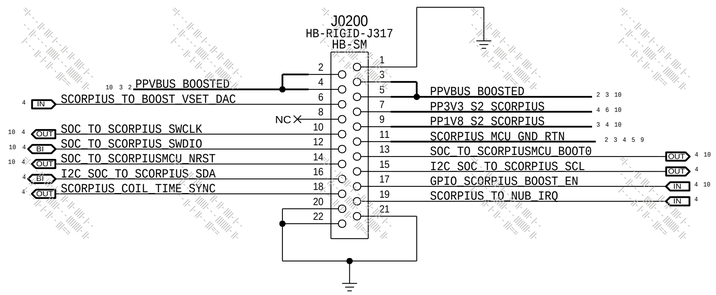


PAGE TITLE
CONNECTOR

# 1.8V SW

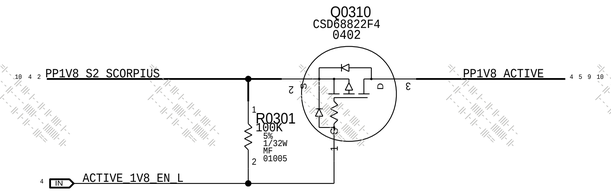


# BUS CURRENT/VOLTAGE SENSE

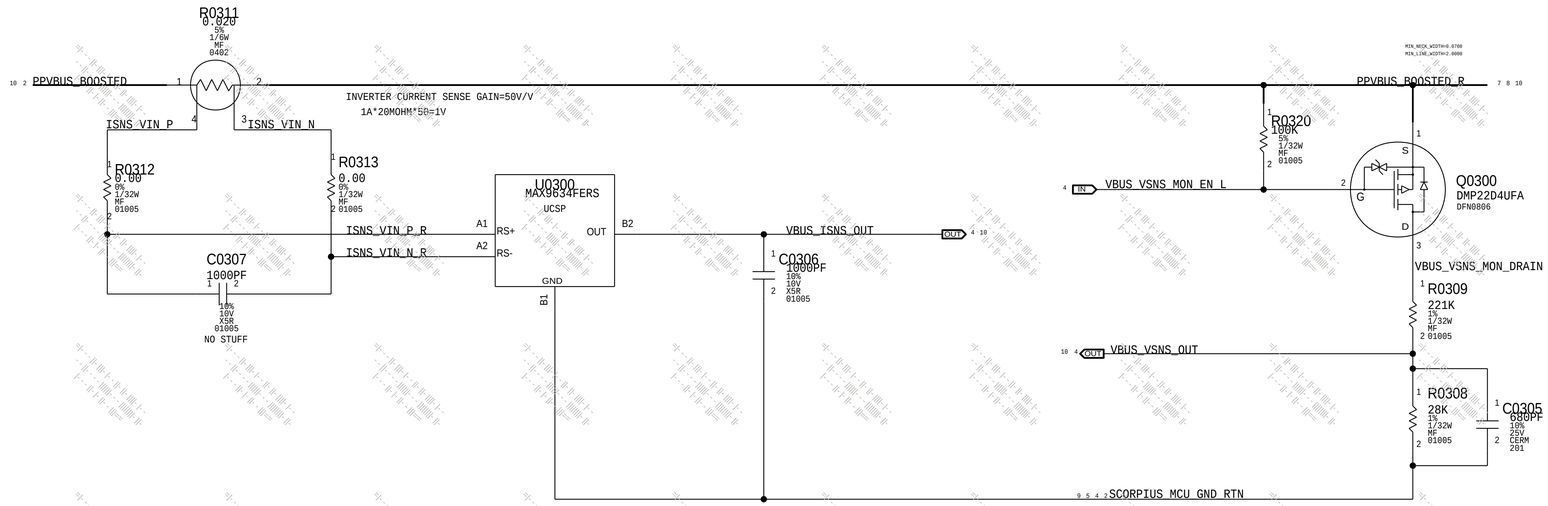


SYNC_DATE=07/18/2017

PAGE TITLE

BUS SENSE

# MCU

L0400
120OHM-0.3A
0402

PP1V8_MCU_VDDA
C0400 1.0UF 20% 10V X5R-CERM 0201-1
C0407 0.01UF 10% 10V X5R-CERM 0201
C0406 0.01UF 10% 6.3V CERM 01005
C0401 0.1UF 10% 10V X5R-CERM 0201
C0402 0.1UF 10% 10V X5R-CERM 0201
C0403 0.1UF 10% 10V X5R-CERM 0201
C0404 0.1UF 10% 10V X5R-CERM 0201
C0405 4.7UF 20% 10V X5R-CERM 0402
PP1V8_S2_SCORPIUS

PP3V3_S2_SCORPIUS
C0411 2.2UF 20% 10V X5R 0201
C0412 0.01UF 10% 6.3V CERM 01005

U0400
STM32L476JGY
WLCSP

VDDIO2 B6, VDDA H9, VDD A9, VDD J1, VDD J8, VBAT B9, VDDUSB A1

| | | | |
|---|---|---|---|
| | H8 | PA0 | NC_MCU_PA0 |
| | G4 | PA1 | NC_MCU_PA1 |
| HALL_NP | G6 | PA2 | |
| HALL_SP | H7 | PA3 | |
| SCORPIUS_TO_BOOST_VSET_DAC | G5 | PA4 | |
| | H6 | PA5 | |
| NTC_SENSE | H5 | PA6 | |
| LP_PING_BUFF | H4 | PA7 | |
| DEBUG_CLK_OUT | E2 | PA8 | |
| | E3 | PA9 | NC_USB_FS_VBUS |
| INV_HB1_PWM1L | D2 | PA10 | |
| | D1 | PA11 | NC_USB_MCU_DP_N |
| | C1 | PA12 | NC_USB_MCU_DP_P |
| SOC_TO_SCORPIUS_SWDIO | C2 | PA13(JTMS-SWDIO) | |
| SOC_TO_SCORPIUS_SWCLK | B2 | PA14(JTCK-SWCLK) | |
| | A2 | PA15(JTDI) | NC_ISNS_AMP_EN |
| | J5 | PB0 | NC_MCU_PB0 |
| INV_HB1_PWM0L | J4 | PB1 | |
| | J3 | PB2 | NC_MCU_PB2 |
| ASK_DEMOD_VREF | A6 | PB3(JTDO-TRACESWO) | |
| ASK_DEMOD_RAW_R | C6 | PB4(NJTRST) | |
| ASK_DEMOD_OUT | C7 | PB5 | |
| | B7 | PB6 | NC_MPF_ASM_COMM |
| | A7 | PB7 | NC_COMP_COMM_REF |
| LP_DET_AMP_EN | E7 | PB8 | |
| | E8 | PB9 | |
| | H3 | PB10 | NC_MCU_PB10_LED1 |
| SCORPIUS_COIL_TIME_SYNC | G3 | PB11 | |
| | H1 | PB12 | NC_MCU_PB12_LED2 |
| | H2 | PB13 | NC_MCU_PB13_LED3 |
| LVL_SHFT_EN | G2 | PB14 | |
| DEMOD_OPAMP_EN | G1 | PB15 | |
| INV_HB1_PWM_DEBUG | A4 | PG9 | |
| | B4 | PG10 | NC_MCU_PG10 |
| INV_HB0_PWM_DEBUG | C4 | PG11 | |
| | C5 | PG12 | NC_MCU_PG12 |
| GPIO_SCORPIUS_BOOST_EN | B5 | PG13 | |
| | A5 | PG14 | |

| | | | |
|---|---|---|---|
| | F9 | PC0 | I2C_SOC_TO_SCORPIUS_SCL |
| | F8 | PC1 | I2C_SOC_TO_SCORPIUS_SDA |
| CHRG_PUMP_EN_L | F7 | PC2 | |
| ACTIVE_1V8_EN_L | G7 | PC3 | |
| VBUS_ISNS_OUT | J7 | PC4 | |
| VBUS_VSNS_OUT | J6 | PC5 | |
| VBUS_VSNS_MON_EN_L | F3 | PC6 | |
| INV_HB0_PWM0L | F1 | PC7 | |
| INV_HB0_PWM1L | F2 | PC8 | |
| NTC_SUPPLY_1V8 | E1 | PC9 | |
| | D3 | PC10 | NC_UART_TX |
| | C3 | PC11 | NC_UART_RX |
| | B3 | PC12 | NC_MCU_PC12 |
| SCORPIUS_TO_NUB_IRQ | B8 | PC13 | |
| | C9 | PC14-OSC32_IN | OSC_32KHZ_IN |
| | C8 | PC15-OSC32_OUT | NC |
| | D9 | PH0-OSC_IN | OSC_24MHZ_IN |
| | D8 | PH1-OSC_OUT | OSC_24MHZ_OUT_R |
| SOC_TO_SCORPIUSMCU_NRST | E9 | RST* | |
| SOC_TO_SCORPIUSMCU_BOOT0 | D7 | BOOT0 | |
| INV_FAULT_L | A3 | PD2 | |

PP1V8_MCU_VDDA
C0413 0.1UF 10% 6.3V CER-X5R 01005
R0400 47K 5% 1/20W MF 201 NOSTUFF
R0401 10K 5% 1/32W MF 01005
SOC_TO_SCORPIUSMCU_NRST
INV_FAULT_L
R0421 0.00 0% 1/32W MF 01005
GD400 SIT1552-32.768KHZ-5PPM CSP
VDD, CLK_OUT, GND1, GND2
OSC_32KHZ_CLK

R0410 0 5% 1/20W MF 201
Y0400 2.00X1.60-SM 16MHZ-8PF
C0414 4.7PF +/-0.1PF 10V NP0-C0G 01005-1
C0415 15PF 5% 10V NP0-C0G-CERM 01005
SCORPIUS_MCU_GND_RTN

C0410 0.1UF 10% 6.3V CER-X5R 01005
R0404 10K 5% 1/32W MF 01005

PP3V3_ACTIVE
R0415 1K 5% 1/20W MF 201 NOSTUFF
R0413 1K 5% 1/20W MF 201 NOSTUFF
R0417 0 5% 1/20W MF 201 NOSTUFF
R0418 0 5% 1/20W MF 201 NOSTUFF
R0416 1K 5% 1/20W MF 201
R0414 1K 5% 1/20W MF 201

VSS A8, VSS B1, VSS J2, VSS J9, VREF+ G8, VSSAVREF- G9

PP1V8_MCU_VDDA
R0407 0.00 0% 1/32W MF 01005
MCU_VREF
C0408 0.1UF 10% 10V X5R-CERM 0201
C0409 1.0UF 20% 10V X5R-CERM 0201-1
R0405 0.00 0% 1/10W MF 0201
SCORPIUS_MCU_GND_RTN

PP1V8_ACTIVE
C0417 0.1UF 10% 6.3V CER-X5R 01005
PP3V3_ACTIVE
C0416 0.1UF 10% 6.3V CER-X5R 01005

U0401
TXB0304 UQFN
VCCA, VCCB, GND

| | | | |
|---|---|---|---|
| INV_HB1_PWM0L | A1 | B1 | INV_HB1_PWM0 |
| INV_HB1_PWM1L | A2 | B2 | INV_HB1_PWM1 |
| INV_HB0_PWM0L | A3 | B3 | INV_HB0_PWM0 |
| INV_HB0_PWM1L | A4 | B4 | INV_HB0_PWM1 |
| LVL_SHFT_EN | OE | | |

R0411 1K 5% 1/20W MF 201
R0412 1K 5% 1/20W MF 201
R0451 1K 5% 1/20W MF 201
R0471 1K 5% 1/20W MF 201
INV_HB1_PWM_R
INV_HB0_PWM_R
R0402 47.0K 5% 1/32W MF 01005

R0419 0 5% 1/20W MF 201
INV_HB1_PWM_R — INV_HB1_PWM
R0420 0 5% 1/20W MF 201
INV_HB0_PWM_R — INV_HB0_PWM

SYNC_DATE=07/18/2017
PAGE TITLE
MCU

# ASK DEMOD PH

PP1V8_MCU_VDDA

C0501 2.2UF 20% 10V CER-X5R 0201

C0502 0.1UF 10% 6.3V CERM-X5R 0201

PP1V8_MCU_VDDA

C0511 0.1UF 10% 6.3V CERM-X5R 0201

SCORPIUS_MCU_GND_RTN

PPVCC_TX_COIL_P

R0500 59.0K 1% 1/16W MF-LF 402

R0510 3.3K 1% 1/32W MF 01005

TX_COIL_P_SCALED

TX_COIL_PLUS

C0500 0.047UF 10% 25V X7R 0402

R0502 3.3K 1% 1/32W MF 01005

TX_COIL_P_FLT

TX_COIL_P_FLT_FB

U0500 MAX44260 UDFN-HF

D0500 BAS16L SOD882

TX_COIL_P_PEAK

C0504 0.15UF 10% 16V X7R-CERM 0402

TX_PEAK_FILT

R0504 2K 1% 1/20W MF 201

TX_PEAK_R

R0505 3.6K 1% 1/20W MF 201

TX_PEAK_FB

U0501 MAX44260 UDFN-HF

ASK_DEMOD_VREF (IN)

ASK_DEMOD_RAW

R0509 1.15K 1% 1/20W MF 201

ASK_DEMOD_RAW_R (OUT)

R0501 10K 1% 1/16W MF-LF 402

VOLTAGE=1.8V

PP1V8_ACTIVE

R0503 3.3K 1% 1/32W MF 01005

C0503 2200PF 10% 25V CER-X7R 0201

C0505 0.022UF 5% 25V X7R 0402

R0506 200K 1% 1/20W MF 201

C0506 100PF 5% 25V C0G 0201

C0508 5600PF 10% 10V CERM 201

DEMOD_OPAMP_EN (IN)

R0507 10K 1% 1/32W MF 01005

R0511 10K 1% 1/32W MF 01005

ASK_DEMOD_VREF (OUT)

R0508 10K 1% 1/32W MF 01005

C0509 0.1UF 10% 6.3V CERM-X5R 0201

SCORPIUS_MCU_GND_RTN

SYNC_DATE=07/18/2017

PAGE TITLE

ASK DEMOD

# 5V CHARGE PUMP

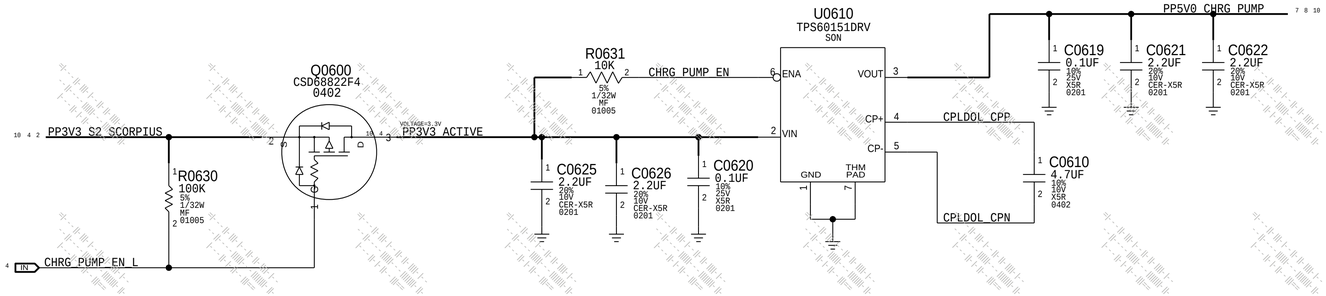


| | |
|---|---|
| SYNC_MASTER=SCORPIUS_DISCRETE | SYNC_DATE=07/18/2017 |
| PAGE TITLE | CHARGE PUMP |

# HALF BRIDGE 0

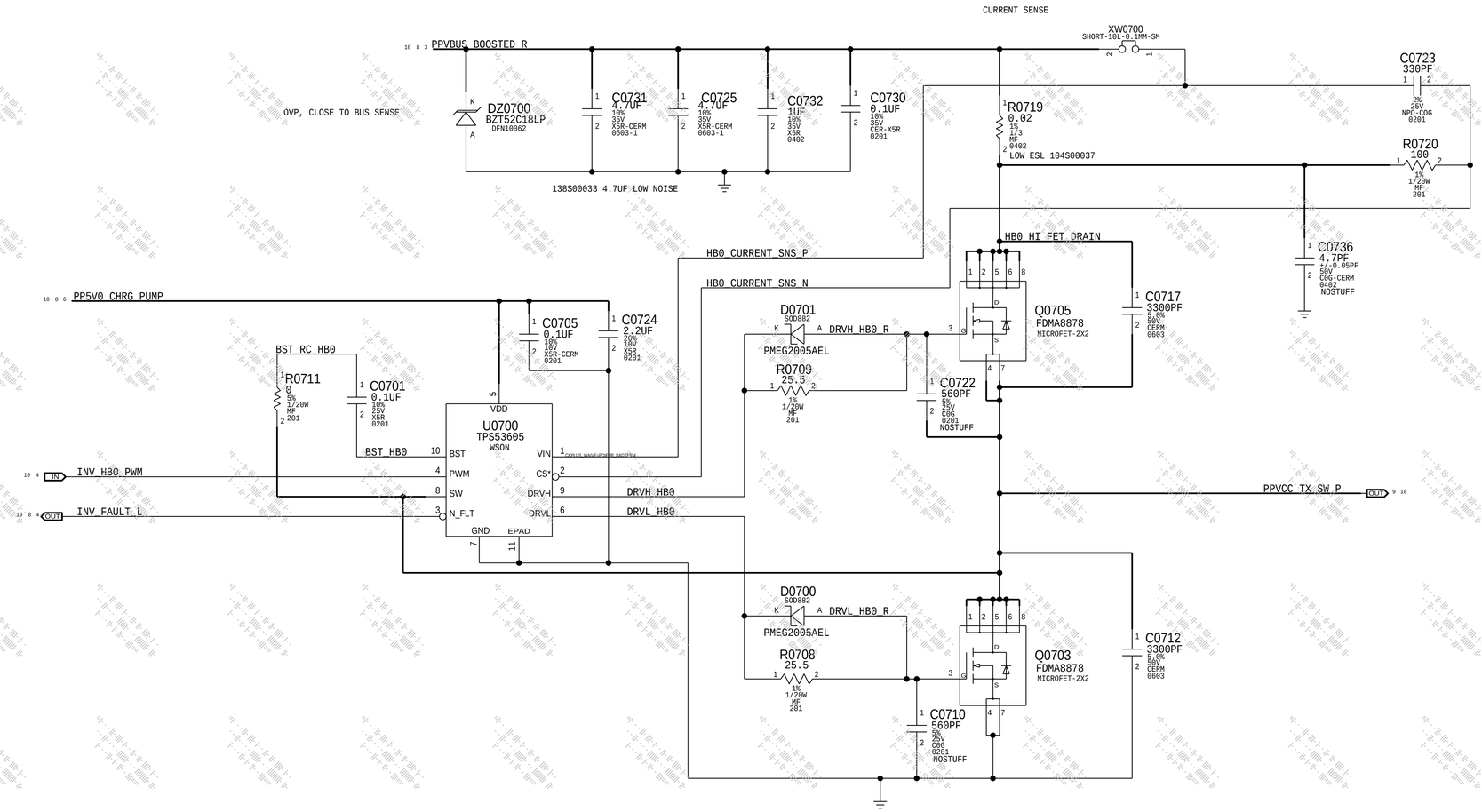


SYNC_MASTER=SCORPIUS_DISCRETE

SYNC_DATE=07/19/2017

PAGE TITLE

INVERTER 0

# HALF BRIDGE 1

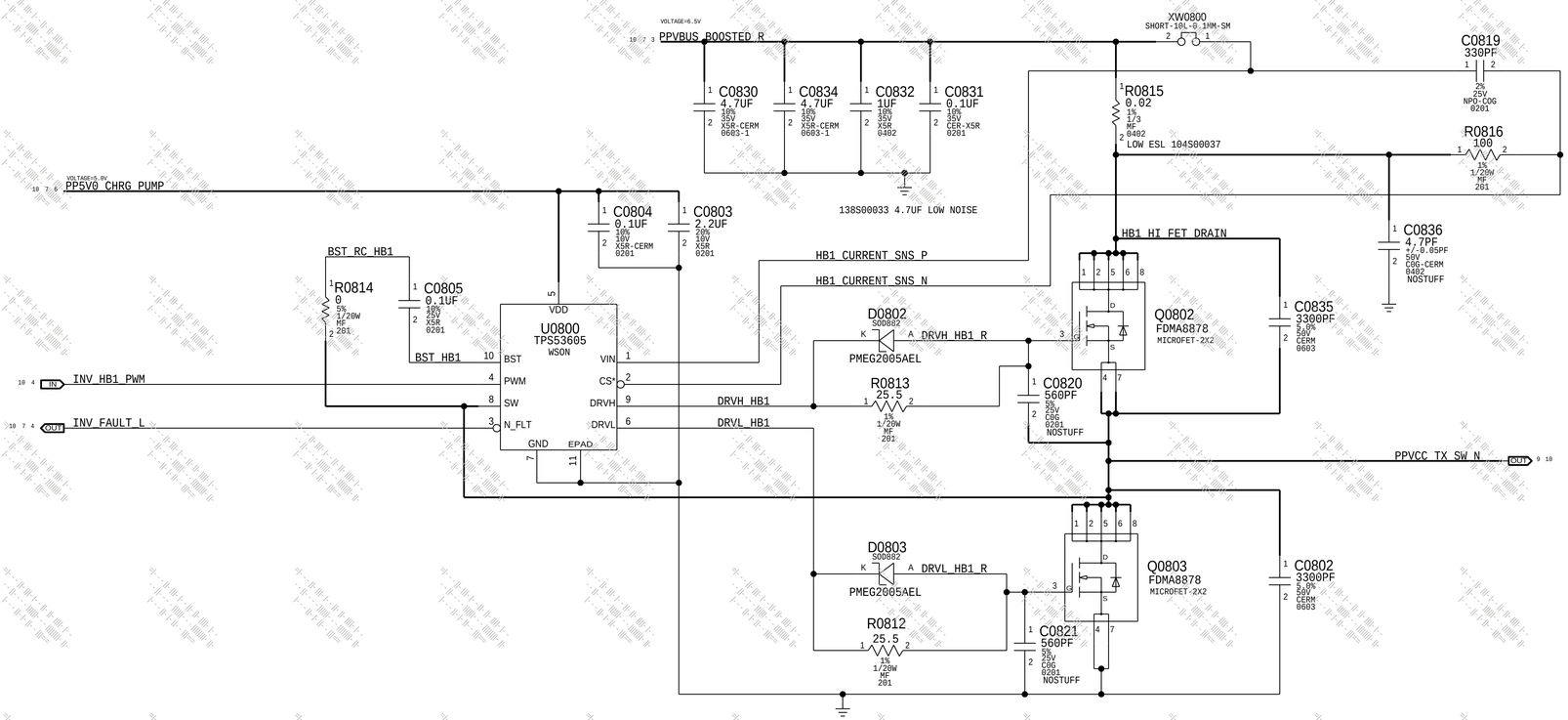


SYNC_MASTER=SCORPIUS_DISCRETE

SYNC_DATE=07/18/2017

PAGE TITLE

INVERTER 1

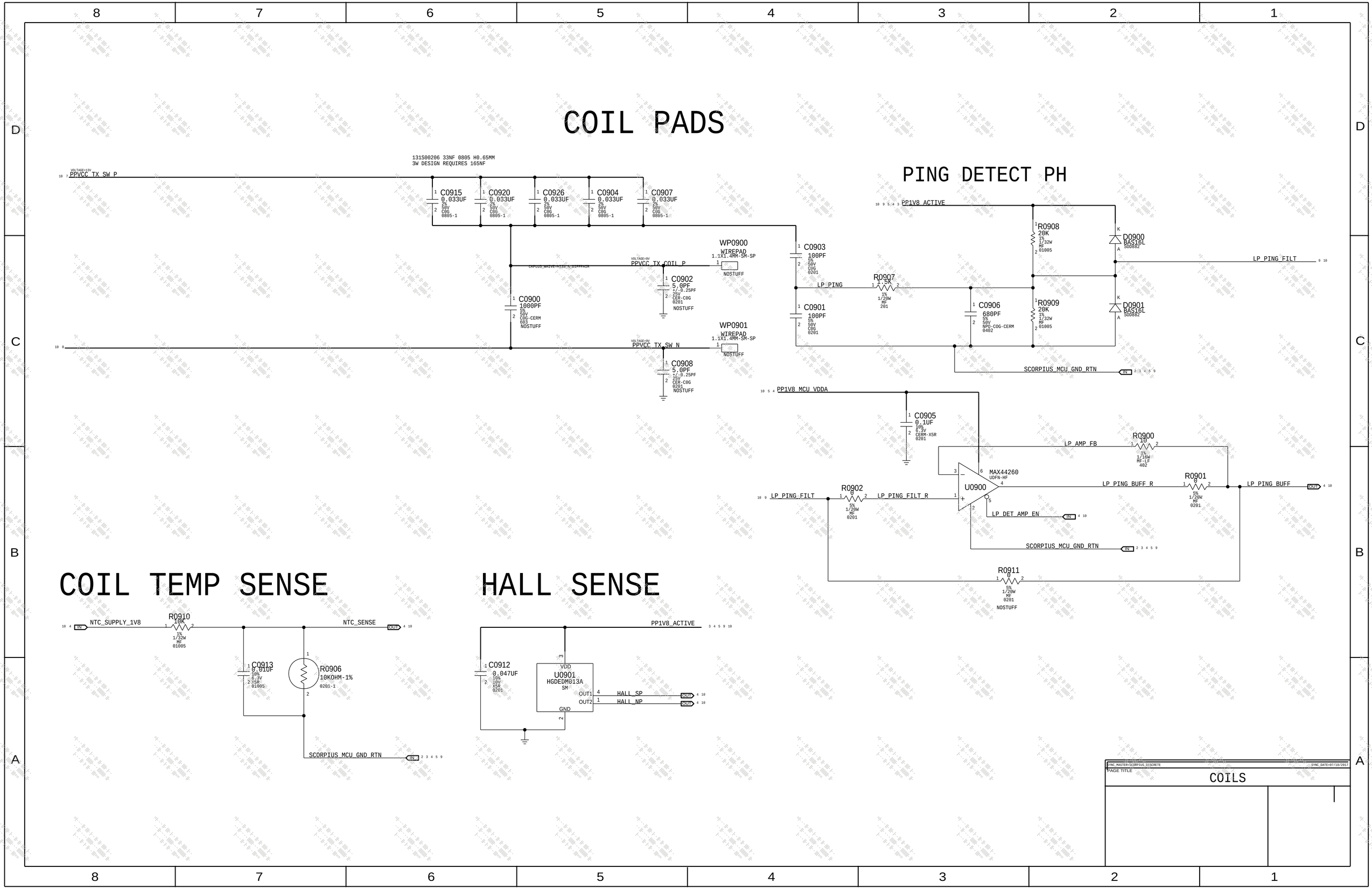
COIL PADS
PING DETECT PH
COIL TEMP SENSE
HALL SENSE
131S00206 33NF 0805 H0.65MM
3W DESIGN REQUIRES 165NF
PPVCC_TX_SW_P
PPVCC_TX_COIL_P
PPVCC_TX_SW_N
PP1V8_ACTIVE
PP1V8_MCU_VDDA
LP_PING
LP_PING_FILT
LP_PING_FILT_R
LP_PING_BUFF_R
LP_PING_BUFF
LP_AMP_FB
LP_DET_AMP_EN
SCORPIUS_MCU_GND_RTN
NTC_SUPPLY_1V8
NTC_SENSE
HALL_SP
HALL_NP
C0915 0.033UF
C0920 0.033UF
C0926 0.033UF
C0904 0.033UF
C0907 0.033UF
C0900 1000PF
C0902 5.0PF
C0908 5.0PF
C0903 100PF
C0901 100PF
C0906 680PF
C0905 0.1UF
C0913 0.01UF
C0912 0.047UF
WP0900 WIREPAD
WP0901 WIREPAD
R0907 1.5K
R0908 20K
R0909 20K
R0900 10
R0901 0
R0902 0
R0911 0
R0910 10K
R0906 10KOHM-1%
U0900 MAX44260
U0901 HGDEDM013A
D0900 BAS16L
D0901 BAS16L
COILS

# DEBUG

## VOLTAGE

| Test Point | Voltage | Signal | Pin |
|---|---|---|---|
| TP1000 | VOLTAGE=1.8V | PP1V8_MCU_VDDA | 4 5 9 |
| TP1001 | VOLTAGE=1.8V | PP1V8_ACTIVE | 3 4 5 9 |
| TP1002 | VOLTAGE=3.3V | PP3V3_ACTIVE | 4 6 |
| TP1003 | VOLTAGE=9.0V | PPVBUS_BOOSTED | 2 3 |
| TP1005 | VOLTAGE=1.8V | PP1V8_S2_SCORPIUS | 2 3 4 |
| TP1006 | VOLTAGE=3.6V | PP3V3_S2_SCORPIUS | 2 4 6 |
| TP1007 | VOLTAGE=5.0V | PP5V0_CHRG_PUMP | 6 7 8 |
| TP1039 | VOLTAGE=6.5V | PPVBUS_BOOSTED_R | 3 7 8 |
| TP1040 | VOLTAGE=13V | PPVCC_TX_SW_P | 7 9 |
| TP1041 | VOLTAGE=9V | PPVCC_TX_SW_N | 8 9 |

## TEST POINTS

| Test Point | Signal | Pin |
|---|---|---|
| TP1008 | INV_HB1_PWM | 4 8 |
| TP1009 | INV_HB0_PWM | 4 7 |
| TP1010 | INV_FAULT_L | 4 7 8 |
| TP1011 | DEBUG_CLK_OUT | 4 |
| TP1012 | HALL_SP | 4 9 |
| TP1013 | HALL_NP | 4 9 |
| TP1015 | VBUS_ISNS_OUT | 3 4 |
| TP1016 | VBUS_VSNS_OUT | 3 4 |
| TP1024 | LP_PING_FILT | 9 |
| TP1028 | TX_COIL_PLUS | 5 |
| TP1029 | ASK_DEMOD_VREF | 4 5 |
| TP1030 | TX_COIL_P_SCALED | 5 |
| TP1031 | TX_COIL_P_PEAK | 5 |
| TP1021 | | |
| TP1022 | | |
| TP1023 | | |
| TP1032 | NTC_SUPPLY_1V8 | 4 9 |
| TP1033 | NTC_SENSE | 4 9 |
| TP1034 | | |
| TP1020 | ASK_DEMOD_OUT | 4 |
| TP1035 | GPIO_SCORPIUS_BOOST_EN | 2 4 |
| TP1036 | LVL_SHFT_EN | 4 |
| TP1018 | LP_PING_BUFF | 4 9 |
| TP1017 | SOC_TO_SCORPIUSMCU_BOOT0 | 2 4 |
| TP1025 | SOC_TO_SCORPIUS_SWDIO | 2 4 |
| TP1026 | SOC_TO_SCORPIUS_SWCLK | 2 4 |
| TP1027 | SOC_TO_SCORPIUSMCU_NRST | 2 4 |
| TP1037 | LP_DET_AMP_EN | 4 9 |
| TP1038 | ASK_DEMOD_RAW_R | 4 5 |
| TP1042 | DEMOD_OPAMP_EN | 4 5 |

PAGE TITLE

Debug